REV.	ECN NO.	MODIFY MATTER	DATE	APPROVED
A		RELEASE TO PRODUCTION		

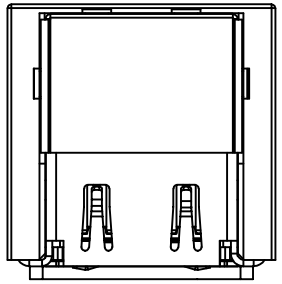

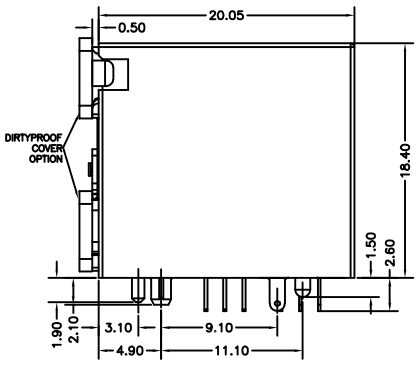

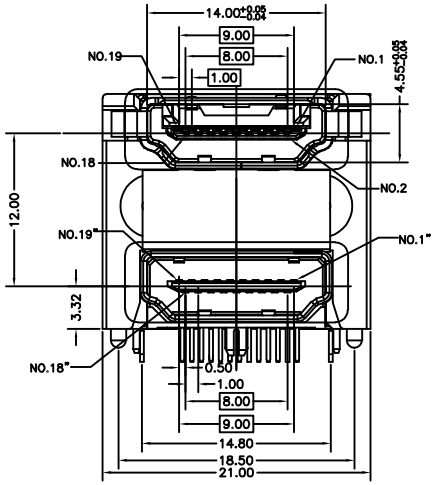

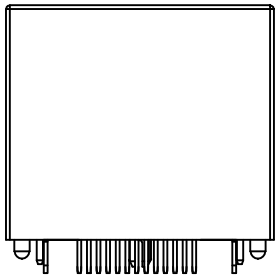

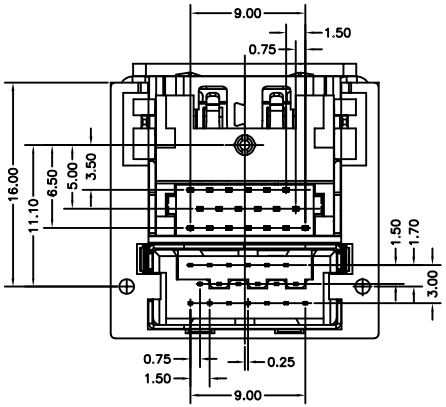

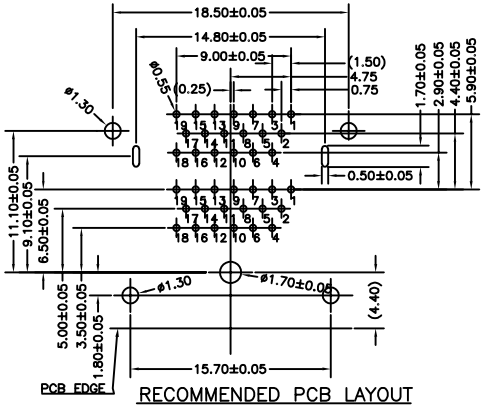

RECOMMENDED PCB LAYOUT
(THICKNESS=1.6±0.15mm)

NOTES:

1.MATERIAL:
- 1.1 HOUSING AND COVER: LCP, UL94V-0, COLOR: BLACK.
- 1.2 CONTACT: COPPER ALLOY.
- 1.3 SHELL: COPPER ALLOY.

2.FINISH:
- 2.1 CONTACT: GOLD G/F PLATED IN CONTACT AREA, 80u" MIN TIN PLATED IN SOLDER AREA, 30u''MIN. NICKEL UNDERPLATED OVERALL.
- 2.2 SHELL: CU 100U" MIN; 50u" MIN NICKEL PLATED OVERALL.

3.SPECIFICATION:
- 3.1 CURRENT RATING: 0.5AMPS.
- 3.2 VOLTAGE RATING: 40VAC.
- 3.3 CONTACT RESISTANCE: INITIAL CONTACT RESISTANCE EXCLUDING CONDUCTOR RESISTANCE: 10 mΩ MAXIMUM . TARGET DESIGN VALUE)
- 3.4 INSULATION RESISTANCE: 100MΩ MIN.
- 3.5 DIELECTRIC WITHSTANDING VOLTAGE: 500 V AC/60sec
- 3.6 INSERTION FORCE: 4.5Kgf MAX.
- 3.7 WITHDRAWAL FORCE: 1.0KGF~4.0KGF
- 3.8 DURABILITY: 10000 CYCLE.
- 3.9 TEMPERTATURE OPERATING: -25°C TO +85°C.

PIN	SIGNAL ASSIGNMENT	PIN	SIGNAL ASSIGNMENT
1	TMDS Data2+	11	TMDS Clock Shield
2	TMDS Data2 Shield	12	TMDS Clock-
3	TMDS Data2-	13	CEC
4	TMDS Data+	14	Reserved (N.C. on device)
5	TMDS Data1 Shield	15	SCL
6	TMDS Data1-	16	SDA
7	TMDS Data0+	17	DDC/CEC Ground
8	TMDS Data0 Shield	18	+5V Power
9	TMDS Data0-	19	Hot Plug Detect
10	TMDS Clock+		

TOLERANCES UNLESS OTHERWISE SPECIFIED:

X.	---
X.X	± 0.38
X.XX	± 0.25
X.XXX	± 0.10
Angle	±1°

THESE DRAWING AND SPCIFICATION ARE THE PROPERTY OF Shenzhen Dongfangyuye ELECTRONIC CO., LTD.. SHALL NOT BE REPRODUCED.

COSTOMER COPY

深圳市东方御业科技有限公司
WWW.DFYYCONN.COM TEL:0755-27155560

DRAWN: CHENLEI	2017/09/10	TITAL: HDMI 19P FEMLAE R/A DIP无唛TYPE 喷码 (RoHS)
CHECKED: CHENLEI	2017/09/10	PART NO: EAST-HDHD38B01AR-01
APPROVED: QINKAIXING	2017/09/10	UNIT: mm / SCALE: N/A / SHEEL: 1:1 / REV.